ECKO ROLL DIVISION

ERD-60

World Class Tooling at an Affordable Price!

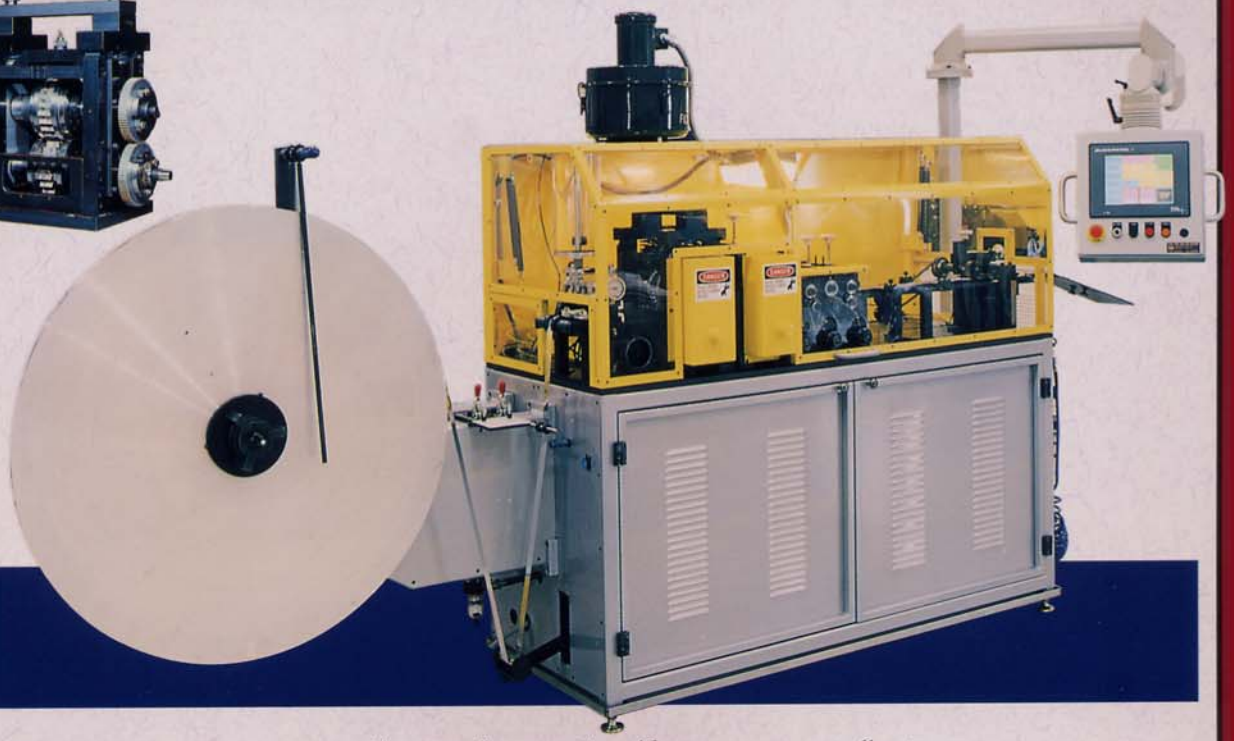

Special Features

The ERD-60 Mini Rolling Mill will be equipped with the following:

- Rigid 2" x 2" tubular steel extended base frame unit. (72" x 28")
  Note: Overall length approximately 140" including the uncoiler frame
- Base mounted powered single uncoiler for 1,524 mm (60") diameter coils of aluminum material with either a 304.8mm (12" I.D.) or 406mm (16" I.D.) low stock sensor probe, variable speed 3 h.p., 230v 60 Hz, 3 phase, DC motor, with Warner pneumatic brake system, Boston 5:1 gear reducer unit, and manual operative expander pads.
- Dancer arm unit with electronic pivot sensor.
- Hardened precision entrance stock gauge tracking rollers.
- 3 h.p., 230v, 60Hz variable speed, 3 phase DC motor with electronic brake formatted for the main drive.
- 480v, 60Hz, 3 phase step down transformer to 230v, 60Hz, 3 phase 15kva.
- Pneumatic pad pressured stock lubricator, with a one gallon reservoir and float valve formatted for mill shut down.
- Boston 5:1 gear reducer with base kit for the main motor drive.
  ***Note:* the mill will automatically shut down when out of lubrication.**
- Regulated 90 p.s.i. roll die cleaning system.
- Electronic anti-wrap system.
- Electronic convolution counter and batch counter.
- Hardened adjustable stock gauges and exit stock gauges.
- Provision for a stainless steel dump station and cover plate. (For use with an optional stop and go Ormec custom cut-off system.)
- Stainless steel dump station guides.
- Stainless steel dip pan. (30" x 74")
- Heavy duty custom Warner Servo driven. guillotine cut-off system with zero max coupling, cam shaft, proximity switch, and 5" wide guillotine blade, with metering roll station.
- Manual cut-off switch for guillotine cut-off system.
- Stainless steel exit chute with fin trapping unit.
- Roll head and gathering box gear guarding.
- Full gull-wing guarding package with additional coil guard.
- 275-CFM filter mist system.
  Note: External ducting to be the responsibility of the company purchasing the mill.
- Swivel 10" color touch screen enclosure with support arm system.
- 1 1/2 axis fin machine system utilizing an Allen Bradley Micro Logix 1500 control unit, 10" color touch screen, with electronic convolution counter, batch counter, Durant encoder and hardware, (1) counting roll station with locating gauges, custom servo guillotine cut-off system, with adjustable stock chute and bracket details.
- Programmatic electronic roll die revolution counter.
- Attendant details.
- Two operation manuals.

ERD-60

Specifications

- Dimensions:
  - Length ..... 3556mm (140")
  - Width ..... 889mm (35")
  - Height ..... 1,994mm (78.5")
- Material Width Range:
  12.7mm (.500") to 114.3mm (4.500")
- Separator Fin Range:
  4.23mm (.166") [6FPI] to
  1.016mm (.040") [25 FPI]
- Fin Amplitude Range:
  3.18mm (.125") to 15.88mm (.625")
- Input Speed of Material:
  up to 750 ft. per minute

Options

- ERD-160 automatic traying machine
- Electronic Ormec system
- Electronic parts counter

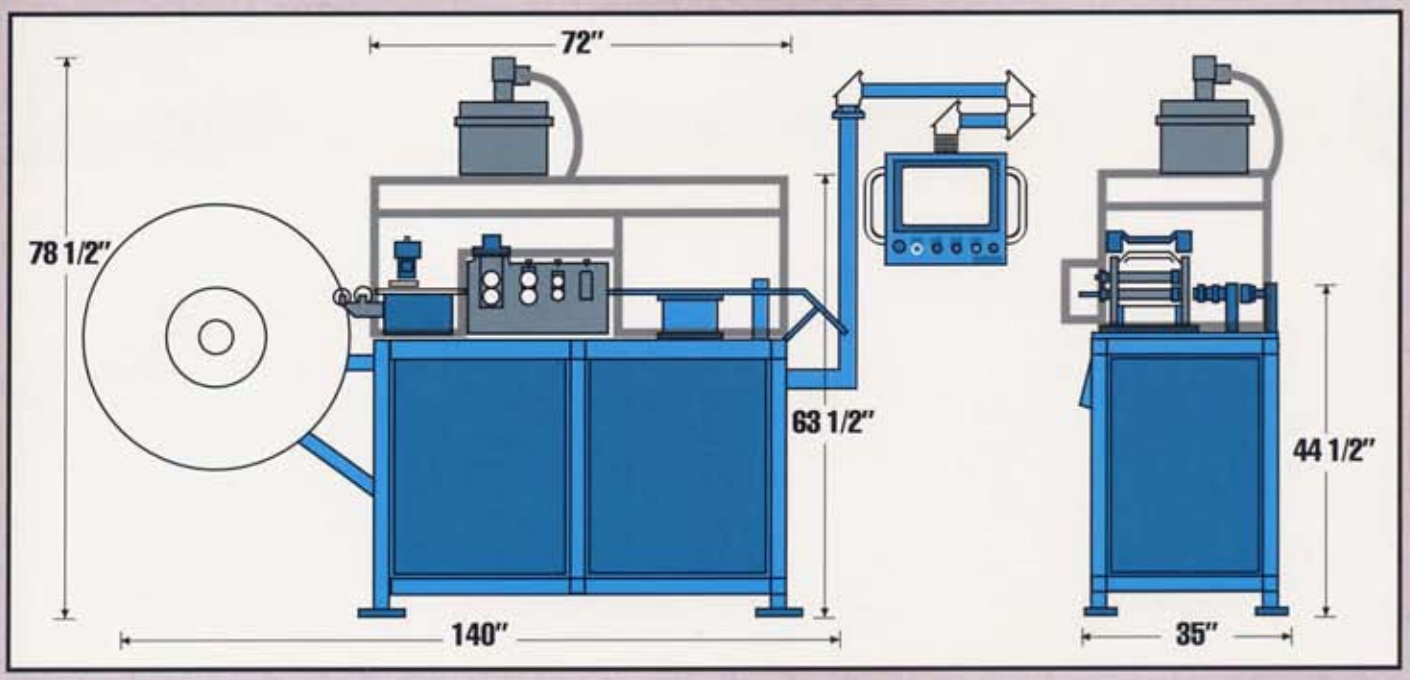

ECKO
ROLL DIVISION

221 Hopkins Ave · Jamestown, NY 14701· Phone: 716.487.0200· Fax: 716.487.0202 · email: eckotool@eckotool.com · www.eckotool.com